PRODUCT SHEET

Description:
Cent. Lock MIC-1018/600mm, NPL, ø19x20mm,40mm Tail,HCK SISO, System J#12, Complete With 1x600mm Locking Bar, 2xMetal Bar, Guides & 3x8mm Pegs

Item number:
14.03.127-5

Units	Box	Carton	HS Code	Barcode
Pcs.	20	100	8301300000	5704866034944

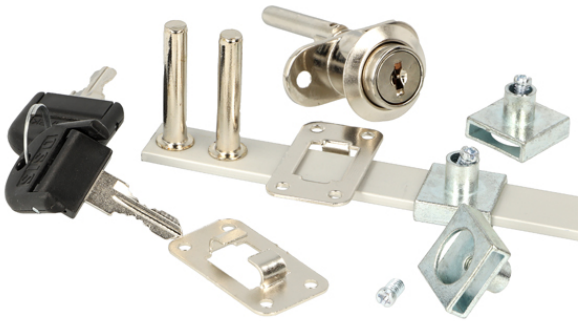

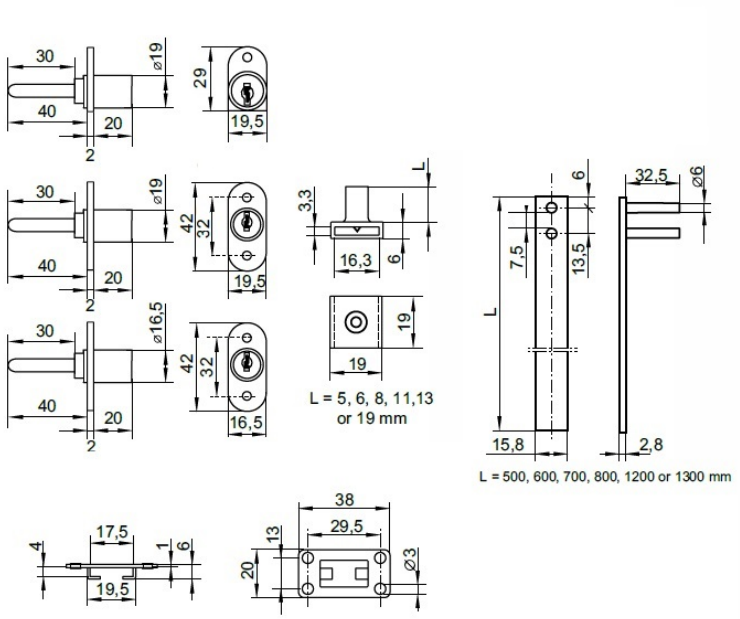

SISO A/S
Mileparken 11
DK-2740 Skovlunde
Denmark
VAT: DK 24786013

Phone +45 45 830 900

www.siso.dk
siso@siso.dk

Danske Bank
Nytorv Branch
Copenhagen
SWIFT: DABADKKK

Account no.
4180 3112 112936
IBAN Account
DK7230003112112936